3090

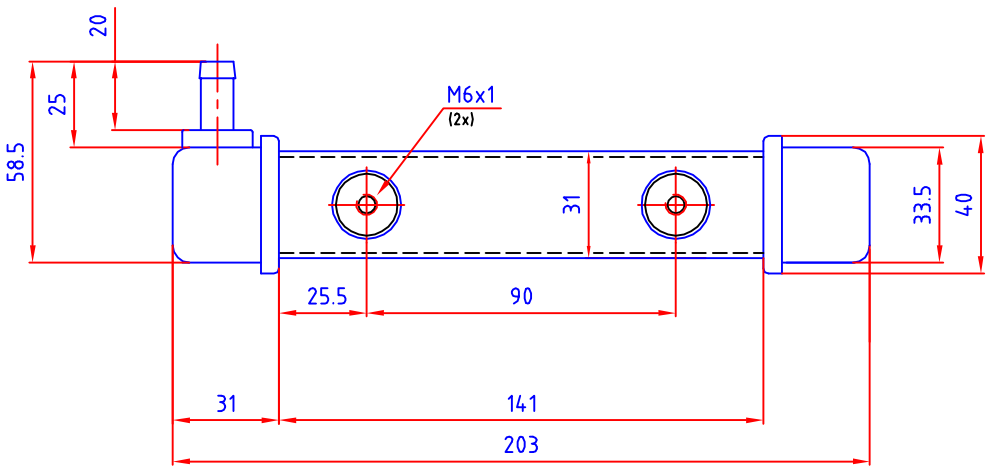


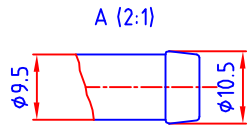


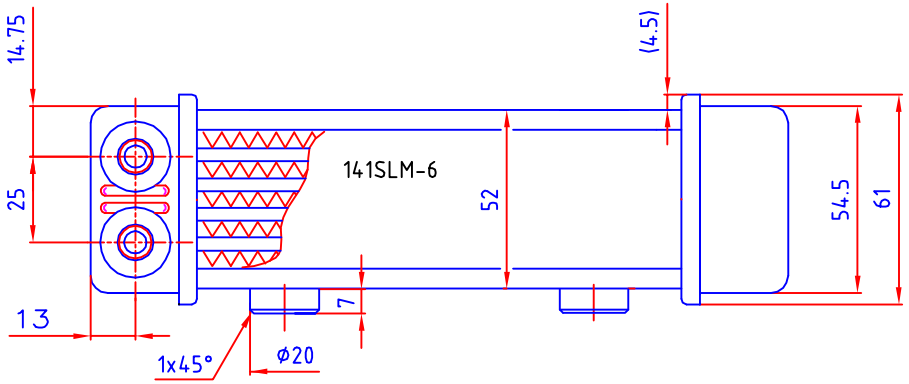


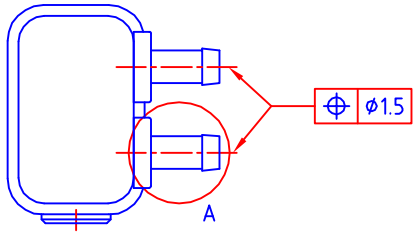


| | |
|---|---|
| WEIGHT | |
| VOLUME | |
| WORKING PRESSURE | 5 bar |
| MAX PRESSURE | 10 bar |
| TEST PRESSURE | 4 bar |
| BURST PRESSURE | |
| TEST ACC TO | |
| PAINT | powdercoated |
| PAINT THICKNESS | |
| CONNECTION MAX TIGHTENING TORQUE | |
| COUNTERACTING SPANNER MUST BE USED WHEN TIGHTENING CONNECTIONS | |

| FINIS/TURB | C/4 |
|---|---|
| DRAWN DATE/SIGN | 082207 MB |
| APPROVAL DATE/SIGN | |
| ENGINEER | |
| QUALITY | |
| PROD | |
| LOGISTICS | |
| CUSTOMER | JAGG |

| POS NO | QTY | DENOMINATION | MATERIAL | DIMENSION | REMARKS |
|---|---|---|---|---|---|
| | | | Al | | |

ALL MEASUREMENTS REFER TO UNPAINTED OBJECT

DENOMINATION 141SLM-6 P03/8 2P

OILCOOLER

Setrab OilCooling
278 Greenscapes Ct., Johnstown, OH 43031, t:+7481967-1726

TOLERANCES WHERE NOT SPECIFIED ISO2768-v

REPLACES

REPLACED BY

CONNECTED DRAWINGS

SCALE

DRAWING NO 3090

ISSUE

| TOLERANCE CLASS: ISO 2768-v<br>PERMISSIBLE DEVIATIONS FOR LINEAR DIMENSIONS EXCEPT FOR BROKEN EDGES. (mm) | 0.5 up to 3 | over 3 up to 6 | over 6 up to 30 | over 30 up to 120 | over 120 up to 400 | over 400 up to 1000 |
|---|---|---|---|---|---|---|
| | — | ±0.5 | ±1 | ±1.5 | ±2.5 | ±4 |